Explanation

Talha Yousaf

2025-CE-93

Non-Inverting Amplifier

Place the Operational Amplifier (Op-Amp) on the breadboard and connect the power supply pins (typically V+ and V-) to the appropriate rails.

:Connect the input signal source directly to the **Non-Inverting (+) terminal**.

Place the **1 kΩ resistor (R1)** between the **Inverting (-) terminal** and the common ground.

Connect the **2 kΩ feedback resistor (R2)** between the **Output terminal** and the **Inverting (-) terminal**. This creates a closed-loop system with a theoretical gain of:

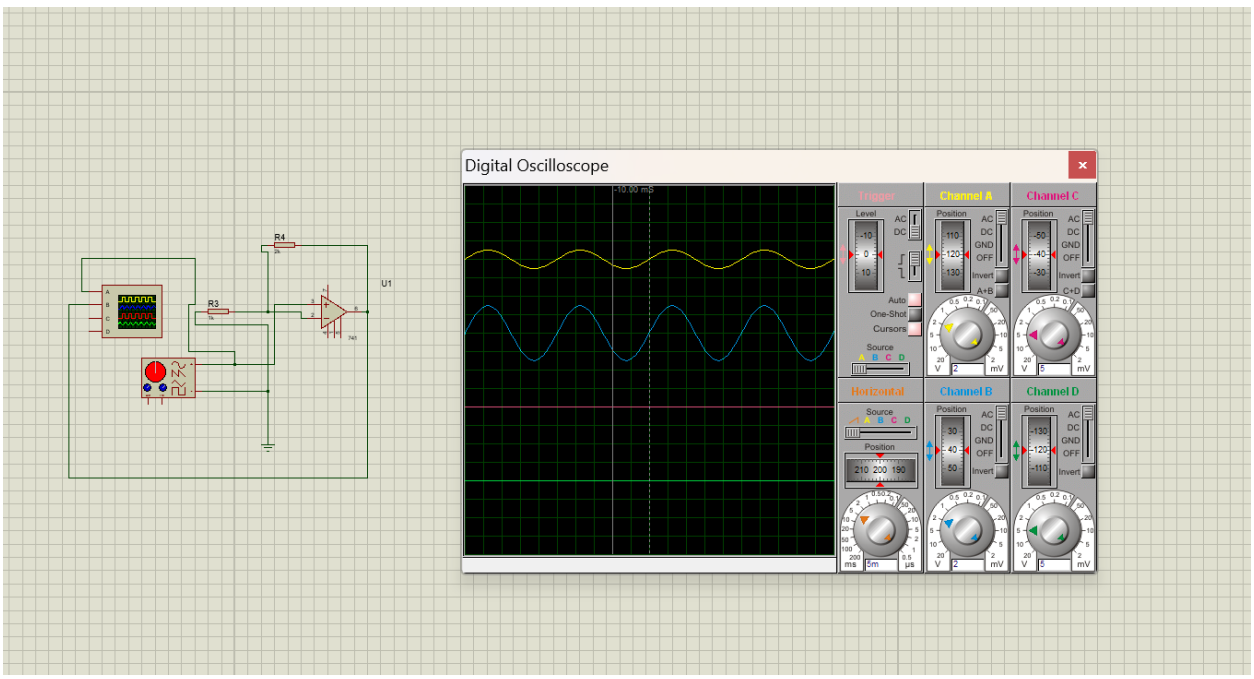

Building the Inverting Amplifier

Connect the **Non-Inverting (+) terminal** of the Op-Amp directly to the circuit ground.

Connect the input signal source to one end of the **1 kΩ input resistor (R1)**, and connect the other end of R1 to the **Inverting (-) terminal**.

Place the **3 kΩ feedback resistor (R2)** between the **Output terminal** and the **Inverting (-) terminal**.

This configuration results in an inverted output with a theoretical gain of:

Av = -R2/R1 = -3k/1k = 3

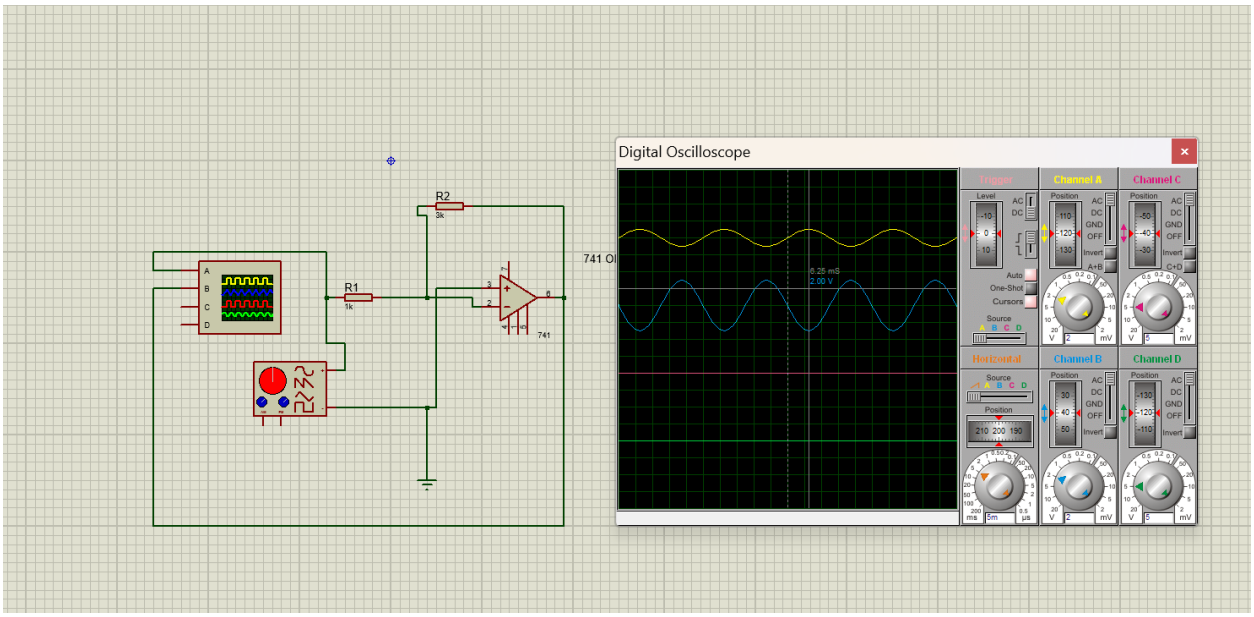

- **Input Signal:** A **Signal Generator** was used to provide a **Sine Wave** with a peak-to-peak voltage of **2V** and a frequency of **40 Hz**.
- **Measurement:** An **Oscilloscope** was connected to the circuit. Channel 1 was used to monitor the input signal from the generator, while Channel 2 was connected to the Op-Amp's output terminal to observe the amplified waveform.
- **Observation:** The oscilloscope allowed for the real-time comparison of the input and output magnitudes and confirmed the phase relationship (in-phase for the first circuit and 180° out-of-phase for the second).